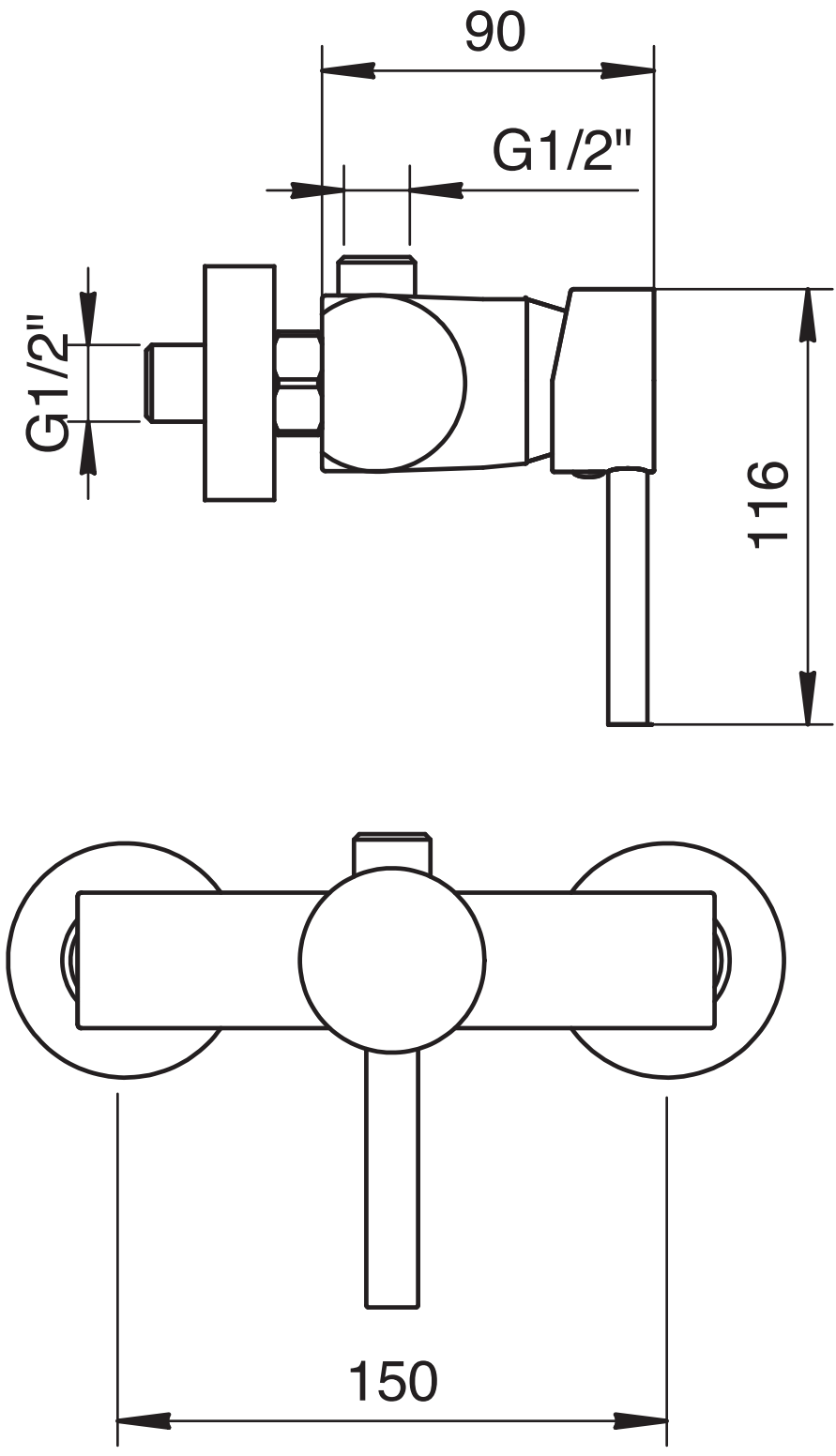
90
G1/2"
G1/2"
116
150